F012 515 041

Issue / Stand } 99-12-27 **Fig./Abb. 1**

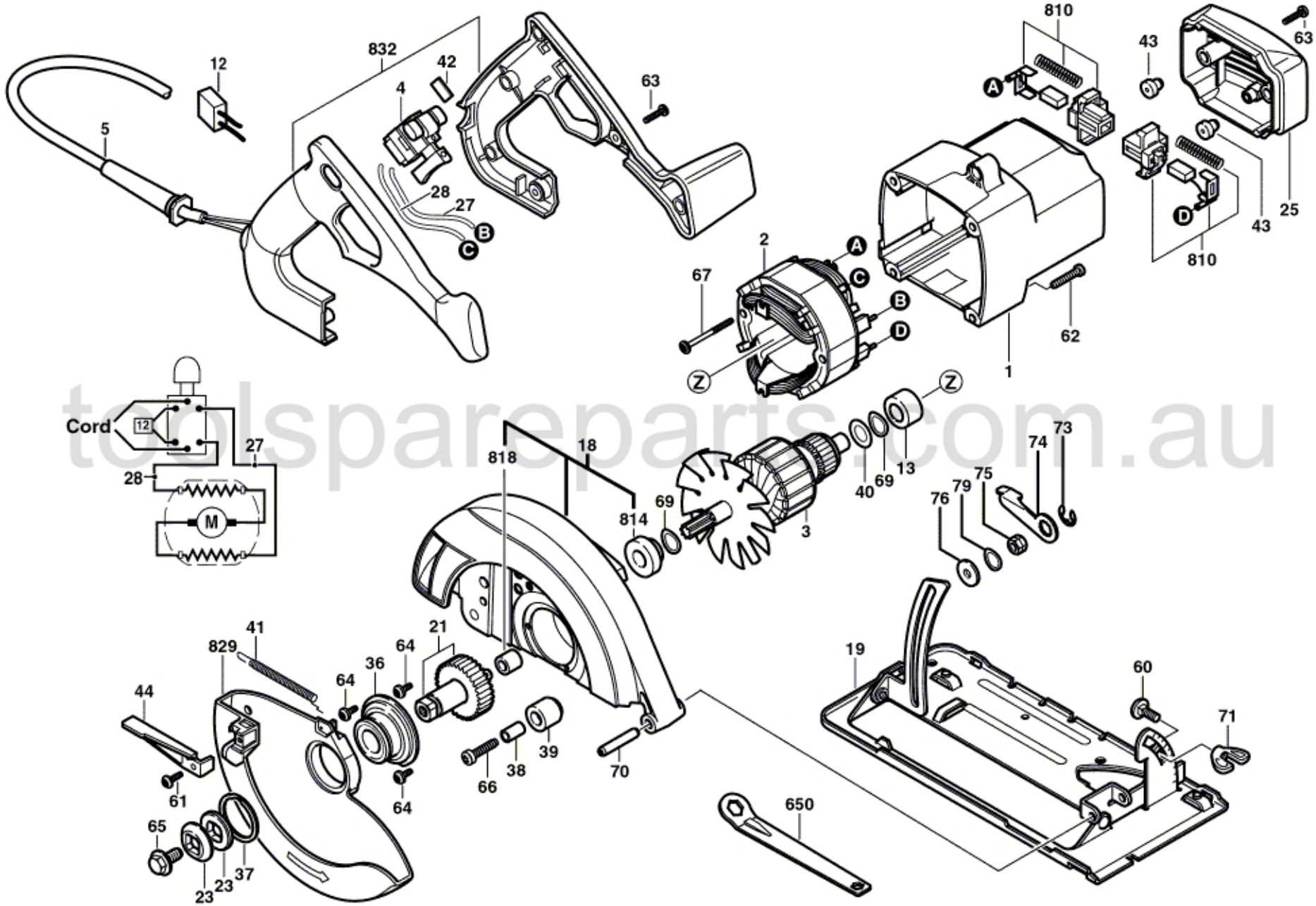

toolspareparts.com.au